PPC-19SAC-15th

15th Gen Intel® Core™
Ultra5 225U /Ultra7 255U processor





Features

- Industrial-grade 19" SXGA LCD panel with 50k backlight lifetime
- Optical bonding PCAP multipoint touch screen
- IP66 grade aluminum alloy front panel
- Intel® Core™ Ultra 5 225U 1.3 / Ultra 7 255U 1.7 GHz processor
- 2 x DDR5 SDRAM, max.96GB, 1 x M.2 2280 NVMe SSD
- 2 x Intel® 226-V 2.5GbE Ethernet, support WoL and PXE
- 2 x RS232/422/485, RS485 support automatic flow control
- Supports TPM2.0 security encryption and Intel vPro® Essentials
- Supports embedded / VESA 100mm x 100mm mounting holes
- 9V to 36V DC Wide Range Power Input，Supporting OVP / OCP / RPP

Specifications

System		
CPU	Intel® Core™ Ultra 5 225U 1.3GHz	Intel® Core™ Ultra 7 255U 1.7GHz
TDP	15W	
Core / Tread	12C / 2P+8E	
L3 Cache	12MB	
GPU	Intel® Graphics 2.0 GHz ，8TOPS	
NPU	Intel® AI Boost，12TOPS	
Chipset	Integrated With Intel® SoC	
BIOS	AMI UEFI	
Memory	2 x DDR5 6400MHz 16GB, Up to 96GB，Non-ECC	
Harddisk	1 x M.2 256G SSD (500G / 1TB SSD)	
Audio	Realtek ALC897 Audio controller	
TPM	TPM 2.0	
Watchdog Timer	255 Timer Levels, Set up by Software	
Operation System	Windows 10 / 11， Linux, Ubuntu	
I / O		
VIDEO	2 x DP	
Ethernet	2 x Intel® I226V, 2.5GbE	
USB	4 x USB 3.2 Gen 2 x 2	
COM	2 x RS-232 / 422 / 485 (Adjustable through BIOS)	
Audio	1x Audio_out & Mic_in	
Wireless Network	Optional (WiFi / Bluetooth / 4G / 5G)	
Expansion		
M.2	1*M.2 (Key-E, 2230, PCIe+USB, Wifi+BT)	
	1*M.2 (Key-B, 3042/3052, PCIe/ USB 3.0+USB2.0, 4G/5G)	
	1*M.2 (Key-M, 2280, NVMe/ SATA, SSD)	
SIM Socket	1x SIM Socket	
Display		
LCD Size	19" (5:4)	
Resolution	1280 x 1024	
Brightness (cd/m²)	450 cd/m2	
Contrast Ratio	1000:1	
Backlight MTBF	50,000 hrs (LED Backlight)	
Viewing Angle	89 / 89 / 89 / 89 (CR≥10) (L / R / U / D)	

We reserve the right to change specifications and product descriptions at any time without prior notice.

Touch screen	
Touch Type	Optical bonding PCAP Touch
Surface Hardness	≥7H
Power	
Power Adapter	1 x Optional AC/DC 12V/5A , 60W
Power Mode	Support AT, ATX Mode
Power Input	9~36VDC，2-Pin Terminal Block Connector with Power Input
Power Protection	OVP (Over Voltage Protection) ｜ OCP (Over Current Protection) ｜ RPP (Reverse Polarity Protection)
Power Consumption	≦45W
Physical	
Material	Aluminum alloy panel, anodized treatment
Mounting	Stand / Wall / VESA / Panel
Dimension (W x H x D)	438 x 363 x 65 mm
Cut-out Size	420 x 345 mm
Packing Size	520 x 180 x 450 mm
Weight (Net)	6.4 KG
Environment	
Operating Temperature	-20~70°C (-4~158°F)
Storage Temperature	-30~80°C (-22~176°F)
Relative Humidity	5%~95%@40°C, non-condensing
Vibration Protection	1.5 Grms, IEC 60068-2-64, random, 5 ~ 500 Hz, 1 hr/axis
IP Level	Front Panel IP66
EMC	CE, FCC，KC ，Class A，ROHS ，IEC， EN 62368-1

Dimension & I/O

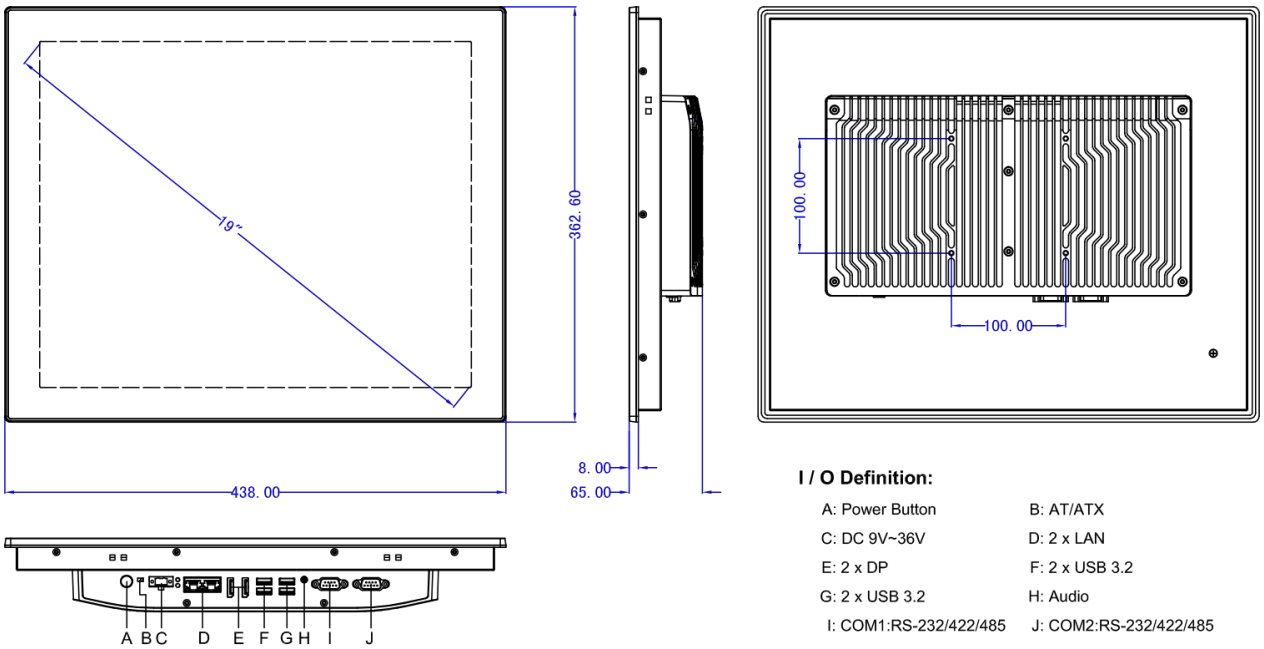

I / O Definition:

A: Power Button	B: AT/ATX
C: DC 9V~36V	D: 2 x LAN
E: 2 x DP	F: 2 x USB 3.2
G: 2 x USB 3.2	H: Audio
I: COM1:RS-232/422/485	J: COM2:RS-232/422/485

Panel Cutout Dimensions: 420 x 345 mm (16.54 x 13.58 in)

We reserve the right to change specifications and product descriptions at any time without prior notice.

Ordering info

Available models		Description
	PPC-5019SAC-15th-2C	19" Fanless Industrial Panel PC Intel® Core™ Ultra 5 225U 1.3GHz Processor With Optical bonding PCAP Touch, 2 x DP / 2 x Intel® I226V, 2.5GbE / 4 x USB 3.2 Gen 2 x 2 / 2 x RS-232 / 422 / 485
	PPC-7019SAC-15th-2C	19" Fanless Industrial Panel PC Intel® Core™ Ultra 7 255U 1.7GHz Processor With Optical bonding PCAP Touch, 2 x DP / 2 x Intel® I226V, 2.5GbE / 4 x USB 3.2 Gen 2 x 2 / 2 x RS-232 / 422 / 485
	PPC-5019SAC-15th-4C	19" Fanless Industrial Panel PC Intel® Core™ Ultra 5 225U 1.3GHz Processor With Optical bonding PCAP Touch, 2 x DP / 2 x Intel® I226V, 2.5GbE / 4 x USB 3.2 Gen 2 x 2 / 2 x RS232/RS422/RS485, 2 x RS232
	PPC-7019SAC-15th-4C	19" Fanless Industrial Panel PC Intel® Core™ Ultra 7 255U 1.7GHz Processor With Optical bonding PCAP Touch, 2 x DP / 2 x Intel® I226V, 2.5GbE / 4 x USB 3.2 Gen 2 x 2 / 2 x RS232/RS422/RS485, 2 x RS232
	PPC-5019SAC-15th-4L	19" Fanless Industrial Panel PC Intel® Core™ Ultra 5 225U 1.3GHz Processor With Optical bonding PCAP Touch, 2 x DP / 2 x Intel® I226V, 2.5GbE / 4 x USB 3.2 Gen 2 x 2 / 4 x Intel® I226V, 2.5GbE
	PPC-7019SAC-15th-4L	19" Fanless Industrial Panel PC Intel® Core™ Ultra 7 255U 1.7GHz Processor With Optical bonding PCAP Touch, 2 x DP / 2 x Intel® I226V, 2.5GbE / 4 x USB 3.2 Gen 2 x 2 / 4 x Intel® I226V, 2.5GbE
	PPC-5019SAC-15th-8D+2C	19" Fanless Industrial Panel PC Intel® Core™ Ultra 5 225U 1.3GHz Processor With Optical bonding PCAP Touch, 2 x DP / 2 x Intel® I226V, 2.5GbE / 4 x USB 3.2 Gen 2 x 2 / 2 x RS232/RS422/RS485, 8 x Digital I/O (4in/4out)
	PPC-7019SAC-15th-8D+2C	19" Fanless Industrial Panel PC Intel® Core™ Ultra 7 255U 1.7GHz Processor With Optical bonding PCAP Touch, 2 x DP / 2 x Intel® I226V, 2.5GbE / 4 x USB 3.2 Gen 2 x 2 / 2 x RS232/RS422/RS485, 8 x Digital I/O (4in/4out)
	PPC-5019SAC-15th-2L+2C	19" Fanless Industrial Panel PC Intel® Core™ Ultra 5 225U 1.3GHz Processor With Optical bonding PCAP Touch, 2 x DP / 2 x Intel® I226V, 2.5GbE / 4 x USB 3.2 Gen 2 x 2 / 2 x LAN, 2 x RS232/RS422/RS485
	PPC-7019SAC-15th-2L+2C	19" Fanless Industrial Panel PC Intel® Core™ Ultra 7 255U 1.7GHz Processor With Optical bonding PCAP Touch, 2 x DP / 2 x Intel® I226V, 2.5GbE / 4 x USB 3.2 Gen 2 x 2 / 2 x LAN, 2 x RS232/RS422/RS485

Packing list

1 x Standard product
1 x 60W PSU (Power Supply)
1 x Power cable & plug
8 x Panel mount metal clips

E-Mail: info@innoaiot.com **URL:** http://www.qytpc.com | http://www.innoaiot.com
TEL: +85-755-86534866 | 1st Bld, Xiangxiang Industrial Park, Shiyan Subdistrict, Shenzhen, China